ENDEAVOUR - SCHEMATICS

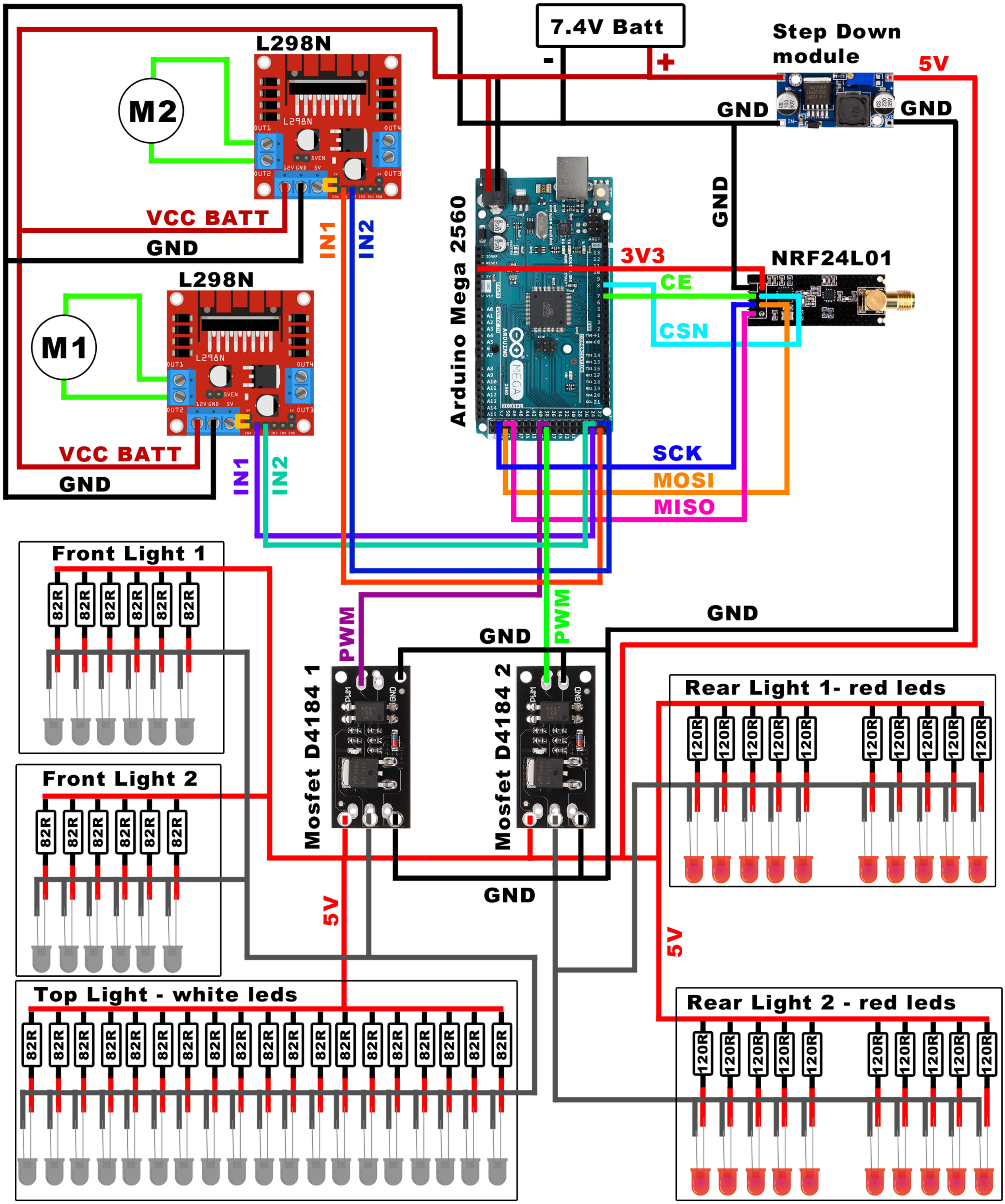

MARTYX INDUSTRIES

ENDEAVOUR - PINOUT

Motor 1

L298N	-	Arduino MEGA
OUT1	-	Motor pin 1
OUT2	-	Motor pin 2
12V	-	Battery VCC
GND	-	Battery GND
5V	-	Not Connected
ENA	-	5V
IN1	-	Arduino Pin 25
IN2	-	Arduino Pin 24

Motor 2

L298N	-	Arduino MEGA
OUT1	-	Motor pin 1
OUT2	-	Motor pin 2
12V	-	Battery VCC
GND	-	Battery GND
5V	-	Not Connected
ENA	-	5V
IN1	-	Arduino Pin 23
IN2	-	Arduino Pin 22

Transceiver

NRF24L01	-	Arduino MEGA
VCC	-	3V3
CSN	-	Arduino Pin 8
CE	-	Arduino Pin 7
SCK	-	Arduino Pin 52
MOSI	-	Arduino Pin 51
MISO	-	Arduino Pin 50

Mosfet D4184 1

Mosfet D4184		
PWM	-	Arduino Pin 39
GND	-	GND
+	-	5V, led cathode
LOAD	-	led anode
-	-	GND

Mosfet D4184 2

Mosfet D4184		
PWM	-	Arduino Pin 38
GND	-	GND
+	-	5V, led cathode
LOAD	-	led anode
-	-	GND

MARTYX
INDUSTRIES